Charakteristika

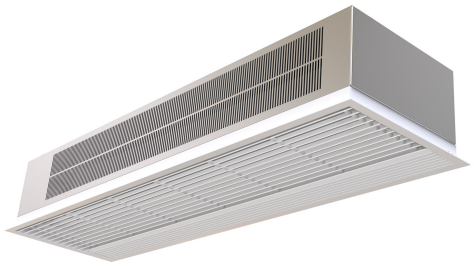

- Konstrukcija samoodrživog kućišta napravljena od galvanizovane čelične ploče, spremno za instalaciju skriveno u lažni plafon.
- It has both internal and external fixings. Electrical and electronic connections inside.
- Ulazna rešetka (nije potrebno održavanje) napravljena sa aluminijumskim profilima i ispusnom mlaznicom, integrisana u jedan beli ram boje RAL 9016Druge boje su dostupne na zahtev.
- Anodizirani aluminijumski ispusni kraci, aerodinamičnog oblika..
- Ventilatori ukrštenog protoka, niskog nivoa buke, pokretani eksternim motorom rotora sa 2 brzine.
- "P" type with water heated coil and integrated regulation for ON/OFF or three stages 0-10V proportional valve. "E" tip sa električnim oklopljenim elementima, tri stadijuma sa integrisanom regulacijom."A" tip bez grejanja, samo vazduh.
- Advanced Plug&Play control. Includes: Advanced PRO control with LCD display and integrated thermostat, door contact, 7m and remote control. With integrated functions: door delay (configurable); interface mode; operation, alarm and maintenance warning signals; and multiple digital inputs that modify the air curtain's operation.
- Includes protective varnish for the electronic board and control.
- Optional:
  • Auxiliary temperature sensors that improve air curtain control and increase energy savings.
  • Clever PRO intelligent control (automatic, programmable, ModBus via PLC, timer, etc.) with an additional temperature sensor.

Specifikacija

50Hz

Modelis	(m³/h)	(m)
RA 1000 A	2,5-3,5	
RA 1500 A	2,5-3,5	
RA 2000 A	2,5-3,5	

Modelis	(m³/h)	(kW)	(m)
RA 1000 E	2,5-3,5		
RA 1500 E	2,5-3,5		
RA 2000 E	2,5-3,5		

Modelis	(m³/h)	(kW)	(kW)	(m)
RA 1000 P86	2,5-3,5			
RA 1500 P86	2,5-3,5			
RA 2000 P86	2,5-3,5			
RA 1000 P64	2,5-3,5			
RA 1500 P64	2,5-3,5			
RA 2000 P64	2,5-3,5			

60Hz

Modelis	(m³/h)	(m)
RA 1000 A 60Hz	2,5-3,5	
RA 1500 A 60Hz	2,5-3,5	
RA 2000 A 60Hz	2,5-3,5	

Matmenys

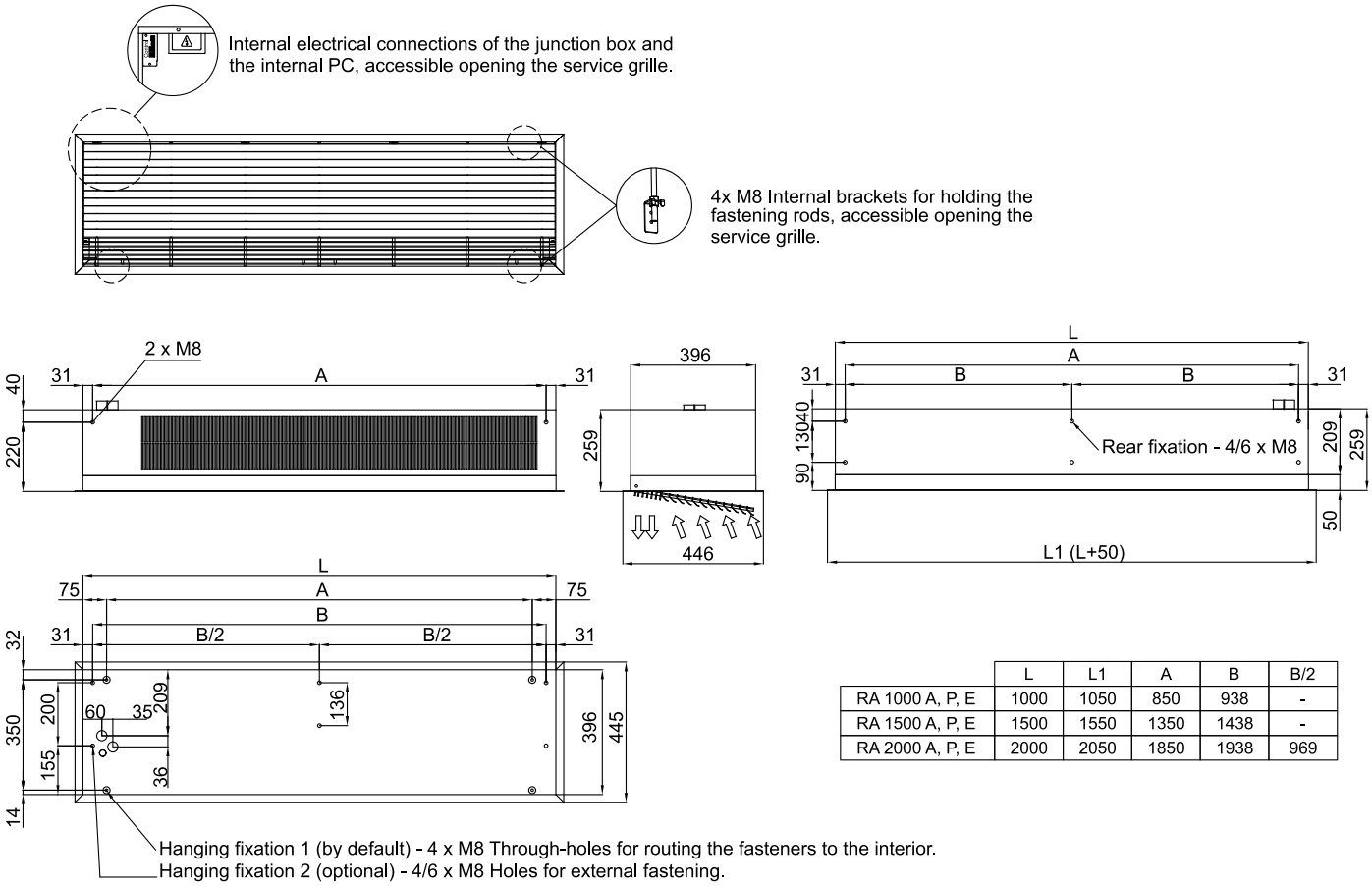

	L	L1	A	B	B/2
RA 1000 A, P, E	1000	1050	850	938	-
RA 1500 A, P, E	1500	1550	1350	1438	-
RA 2000 A, P, E	2000	2050	1850	1938	969